DH-SD6982/82A-HN

2Mp Full HD Network PTZ Dome Camera

Features

- 4.7mm ~ 94.0mm(20x)optical zoom
- H.264 & MJPEG dual-stream encoding and JPEG image capture
- Max 25/30fps@1080p resolution
- WDR(DWDR), Day/Night(ICR), DNR (2D&3D),Auto iris, Auto focus, AWB, AGC,BLC
- Multiple network monitoring: Web viewer, CMS(DSS/PSS) & DMSS
- Max 240°/s pan speed, 360° endless pan rotation
- Up to 255 presets, 5 auto scan, 8 tour, 5 pattern
- Built-in 7/2 alarm in/out
- Support intelligent 3D positioning with DH-SD protocol
- Micro SD memory, IP66
- IR LEDs up to 100m

DH-SD6982/82A-HN

Dimensions (mm)

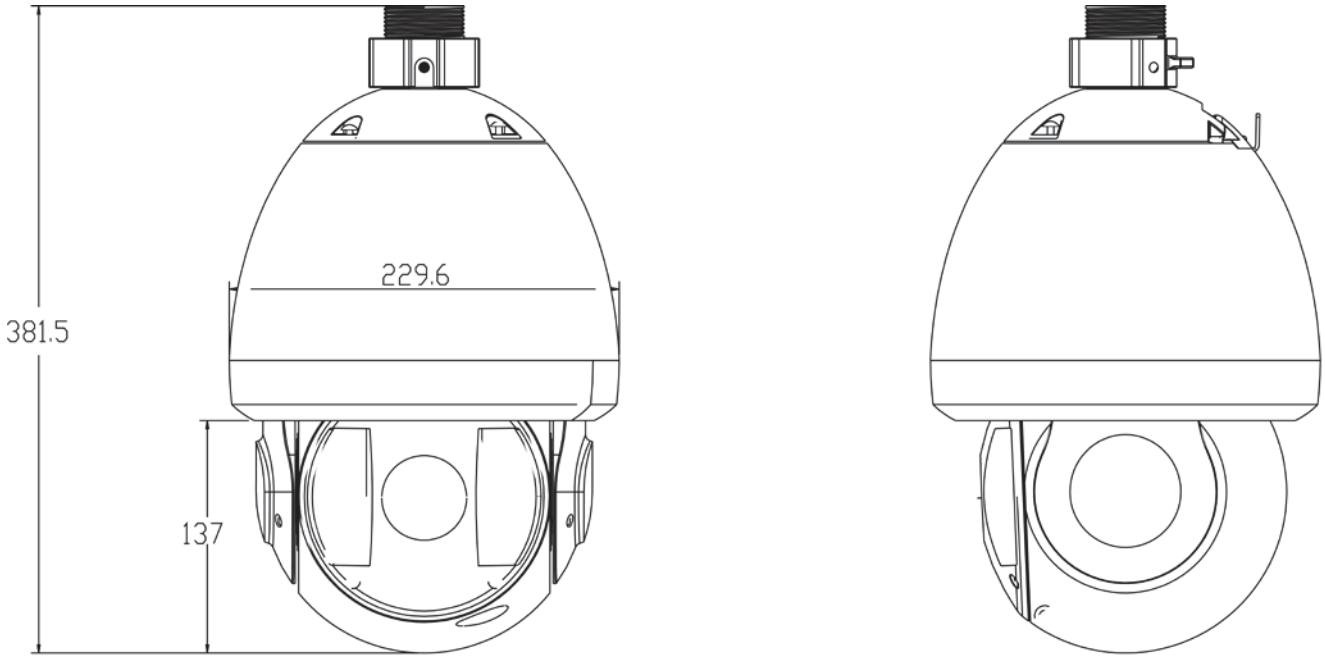

DH-SD6982/82A-HN

Technical Specifications

Model	DH-SD6982-HN	DH-SD6982A-HN
Camera		
Image Sensor	1/3" Exmor CMOS	
Effective Pixels	1944(H) x 1092(V), 2 Megapixels	
Scanning System	Progressive	
Electronic Shutter Speed	1/1 to 1/10,000 s	1/1 ~ 1/30,000s
Min. Illumination	Color: 0.5 lux@F1.6 B/W: 0.095 lux@F1.6	Color: 0.05Lux@F1.6 B/W: 0.005Lux@F1.6
S/N Ratio	More than 50dB	
Video Output	BNC(1.0Vp-p/75Ω), PAL / NTSC	
Camera Features		
Max. IR LEDs Length	100m	
Day/Night	Auto(ICR) / Color / B/W	
Backlight Compensation	BLC / HLC / WDR	BLC / HLC /DWDR (Digital WDR)
White Balance	Auto, ATW, Indoor, Outdoor, Manual	
Gain Control	Auto / Manual	
Noise Reduction	2D / 3D	
Privacy Masking	Up to 24 areas	
Digital Zoom	12x	16x
Lens		
Focal Length	4.7mm ~ 94.0mm(20x Optical zoom)	
Max Aperture	F1.6 ~ F3.5	
Focus Control	Auto / Manual	
Angle of View	H: 55.4°~2.9°	H: 58.2° ~ 2.9°
Close Focus Distance	10mm ~ 800mm	10mm~ 1000mm
PTZ		
Pan/Tilt Range	Pan: 0° ~ 360° endless; Tilt: -2° ~ 90°, auto flip 180°	
Manual Control Speed	Pan: 0.1° ~160° /s; Tilt: 0.1° ~120° /s	
Preset Speed	Pan: 240° /s; Tilt: 200° /s	
Preset	80(DH-SD), 255(Pelco-P/D)	
PTZ Mode	5 Pattern, 8 Tour, Auto Pan, Auto Scan	
Speed Setup	Human-oriented focal length/ speed adaptation	
Power up Action	Auto restore to previous PTZ and lens status after power failure	
Idle Motion	Activate Preset/Pan/Scan/Tour/Pattern if there is no command in the specified period	
Time Task	Auto activation of Preset/Pan/Scan/Tour/Pattern by preset-time	
Protocol	DH-SD, Pelco-P/D (Auto recognition)	
Video		
Compression	H.264 / MJPEG	
Resolution	1080P(1920×1080) / 720P(1280×720) / D1(704×576/704×480) / CIF(352×288/352×240)	

DH-SD6982/82A-HN

Frame Rate	Main Stream	1080P/720P(1 ~ 25/30fps)
	Sub Stream	D1/CIF(1 ~ 25/30fps)
Bit Rate		H.264: 56K ~ 8192Kbps, MJPEG: 56K ~ 20480Kbps
Audio		
Compression		G.711a / G.711u(32kbps)/PCM(128kbps)
Interface		1/1 channel In/Out
Network		
Ethernet		RJ-45 (10/100Base-T)
Protocol		IPv4/IPv6, HTTP, HTTPS, SSL, TCP/IP, UDP, UPnP, ICMP, IGMP, SNMP, RTSP, RTP, SMTP, NTP, DHCP, DNS, PPPOE, DDNS, FTP, IP Filter, QoS, Bonjour
ONVIF		ONVIF Ver. 2.0 conformance
Max. User Access		20 users
Smart Phone		iPhone, iPad, Android, Windows Phone
Auxiliary Interface		
Memory Slot		Micro SD, Max 32GB
RS485		1
Alarm		7/2 channel In/Out
General		
Power Supply		AC 24V/3A (±10%) / DC12V optional
Power Consumption		17W/35W(IR LEDs on, Heater on)
Working Environment		-30°C ~ 60°C / Less than 90% RH
Ingress Protection		IP66
Dimensions		Φ229.6(mm) x 381.5(mm)
Weight		7.0kg

http://www.asi.ind.in

Dahua Technology Co., Ltd.
1187 BinAn Road, Binjiang District, Hangzhou, China
Tel: +86-571-87688883
Fax: +86-571-87688815
Email:overseas@dahuatech.com
www.dahuatech.com

*Design and specifications are subject to change without notice.

© 2012 Dahua Technology Co., Ltd.